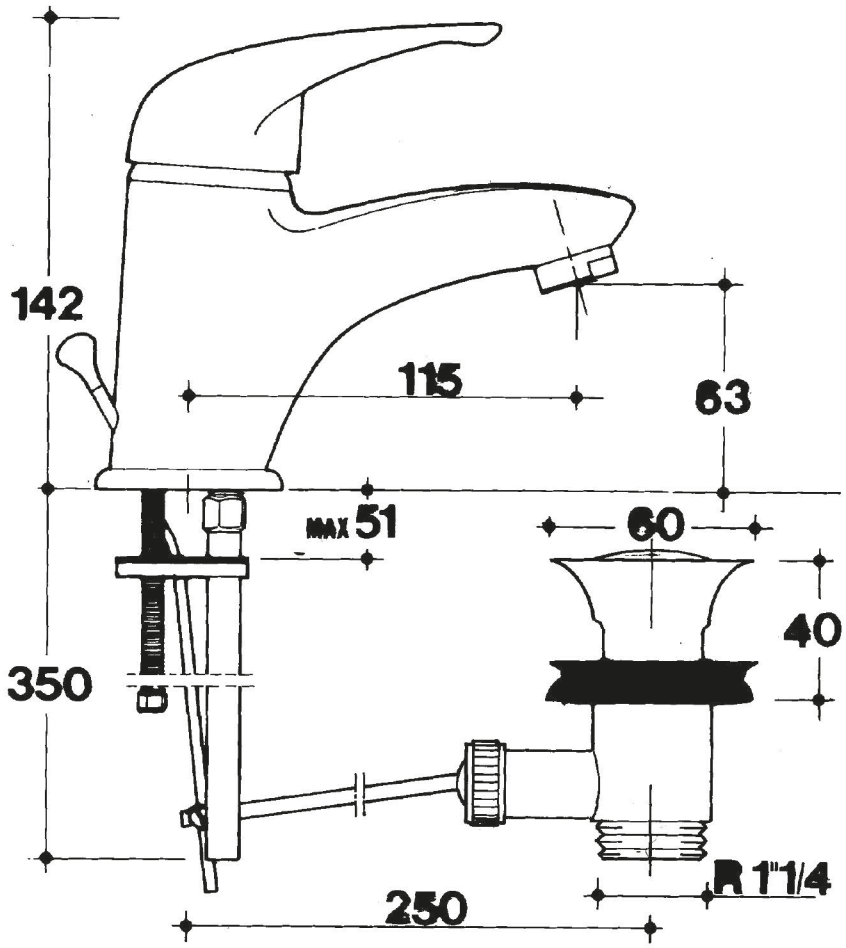CROLLA
DISTINCTION AND TECHNOLOGY